Form 19322
(539)
PRINTED IN U. S. A.

DO NOT REMOVE
HISTORICAL COPY
DO NOT REMOVE

SINGER

31-29

THE SINGER MANUFACTURING COMPANY

From the library of: Superior Sewing Machine & Supply LLC

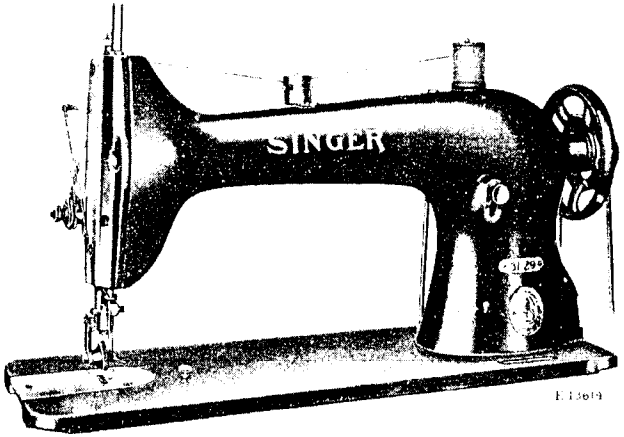

Copyright, U. S. A., 1939
by The Singer Manufacturing Co.
All Rights Reserved for all Countries

22308 - ½

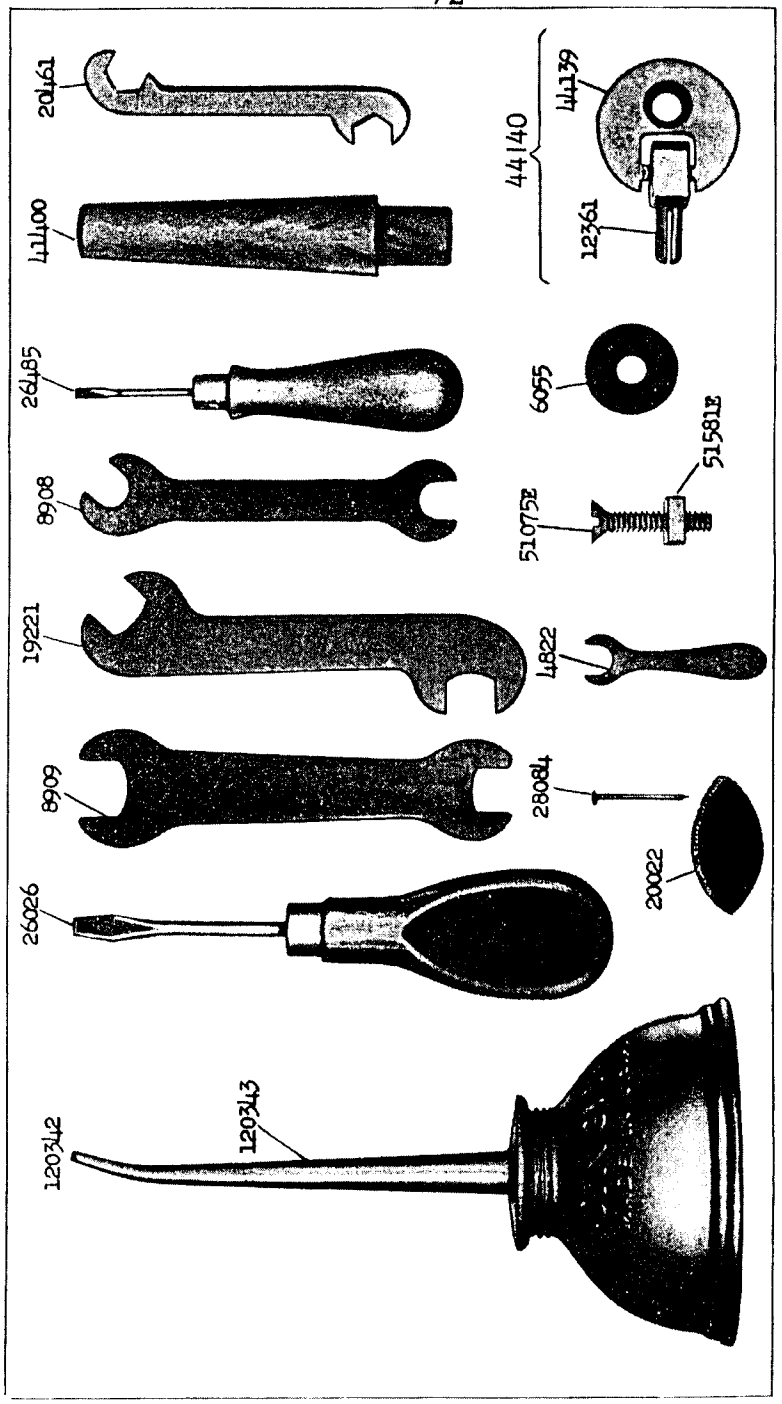

From the library of: Superior Sewing Machine & Supply LLC

From the library of: Superior Sewing Machine & Supply LLC

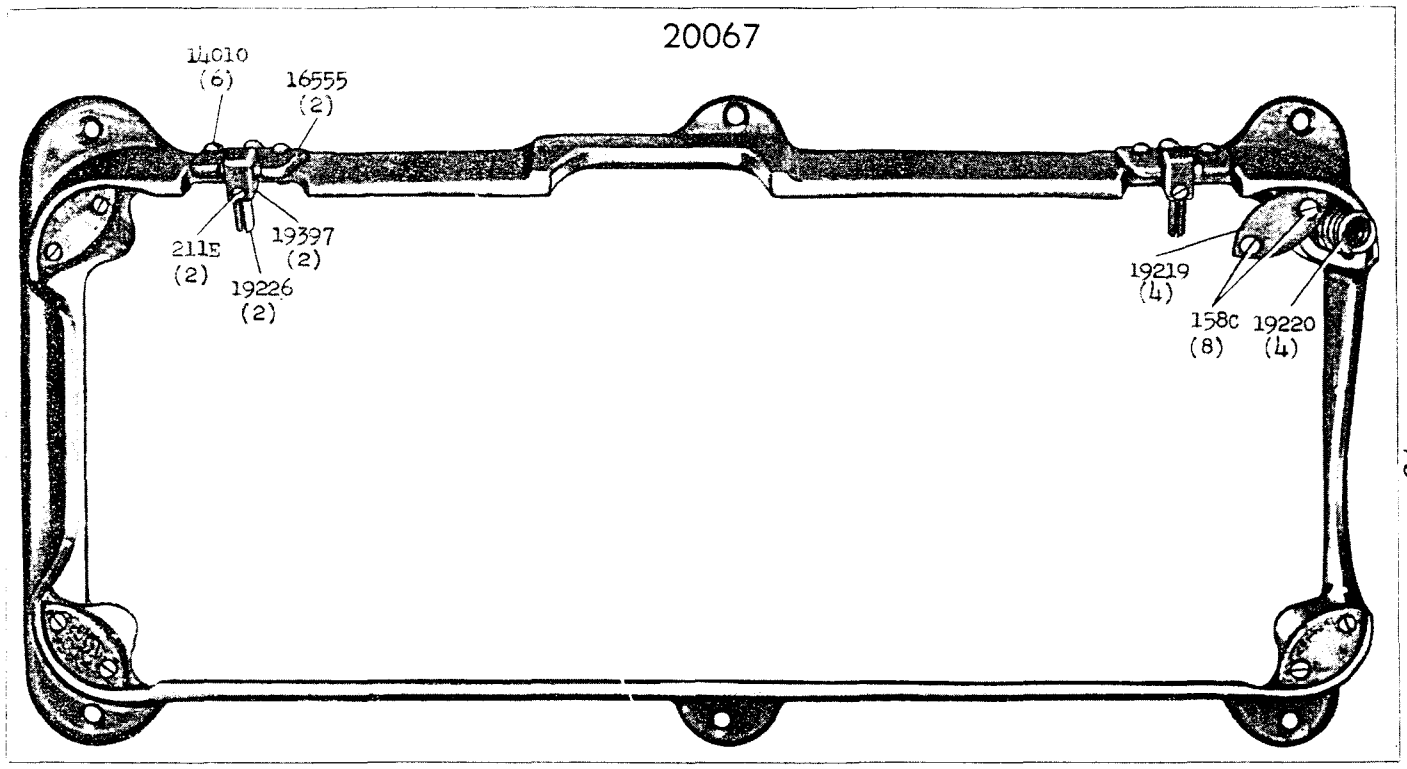

22309 - 1/3

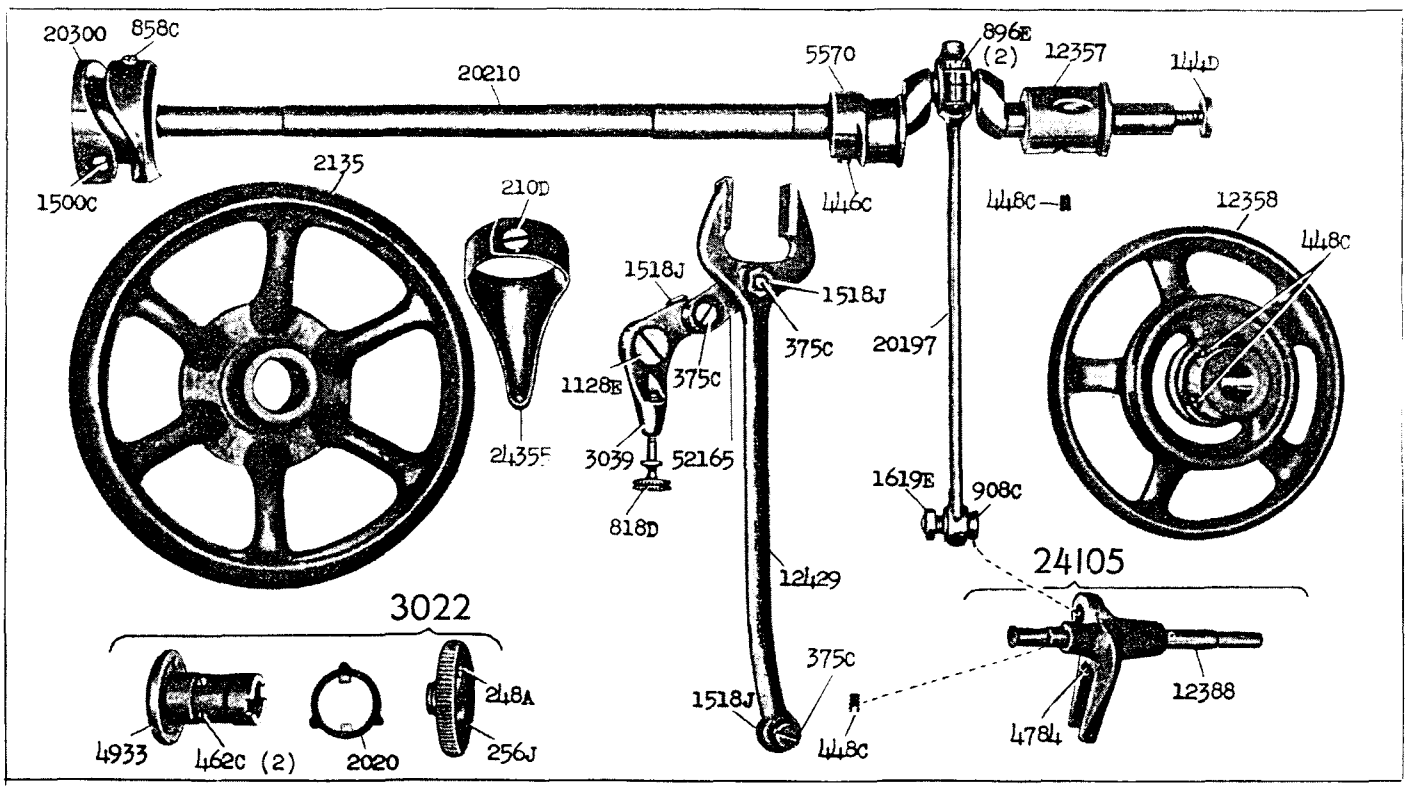

22318 - 1/3

From the library of: Superior Sewing Machine & Supply LLC

From the library of: Superior Sewing Machine & Supply LLC

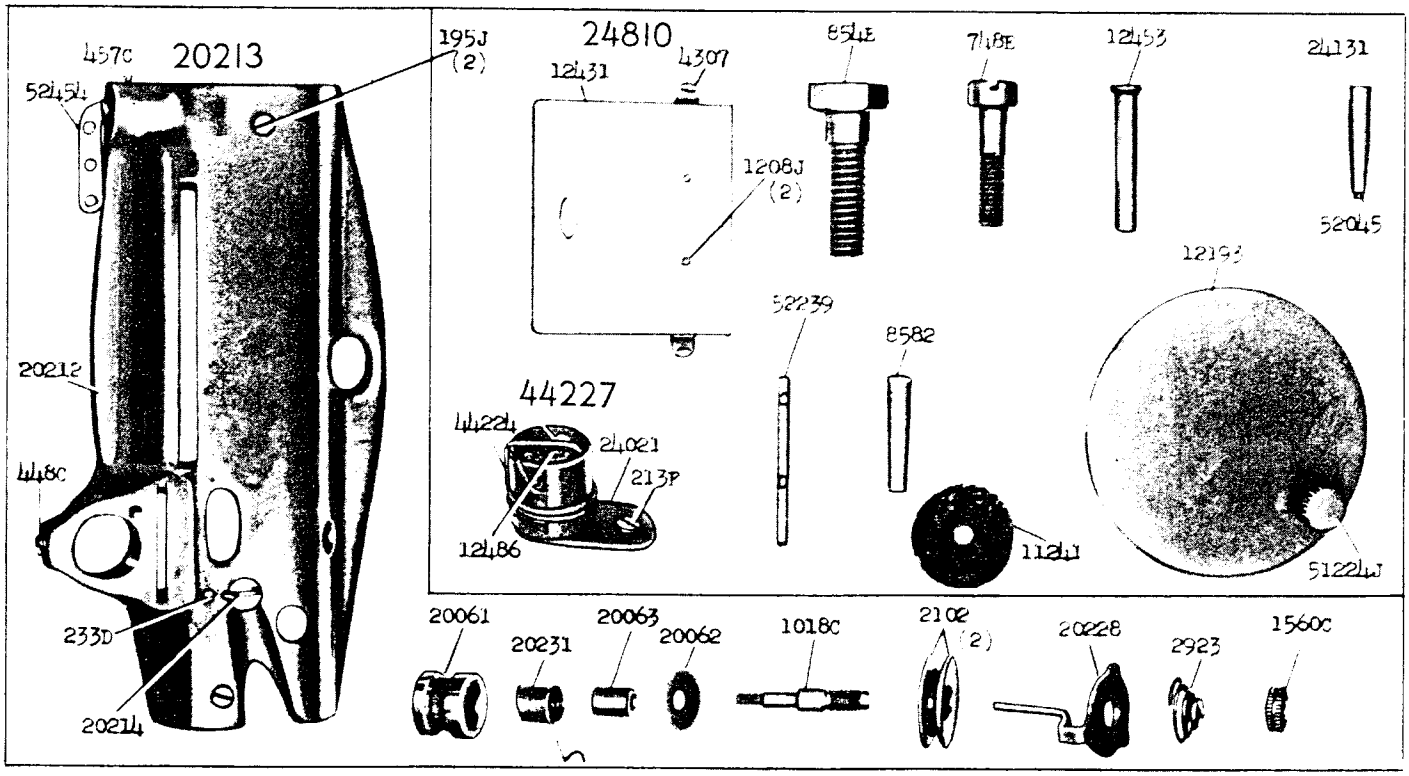

22319 - 1/2

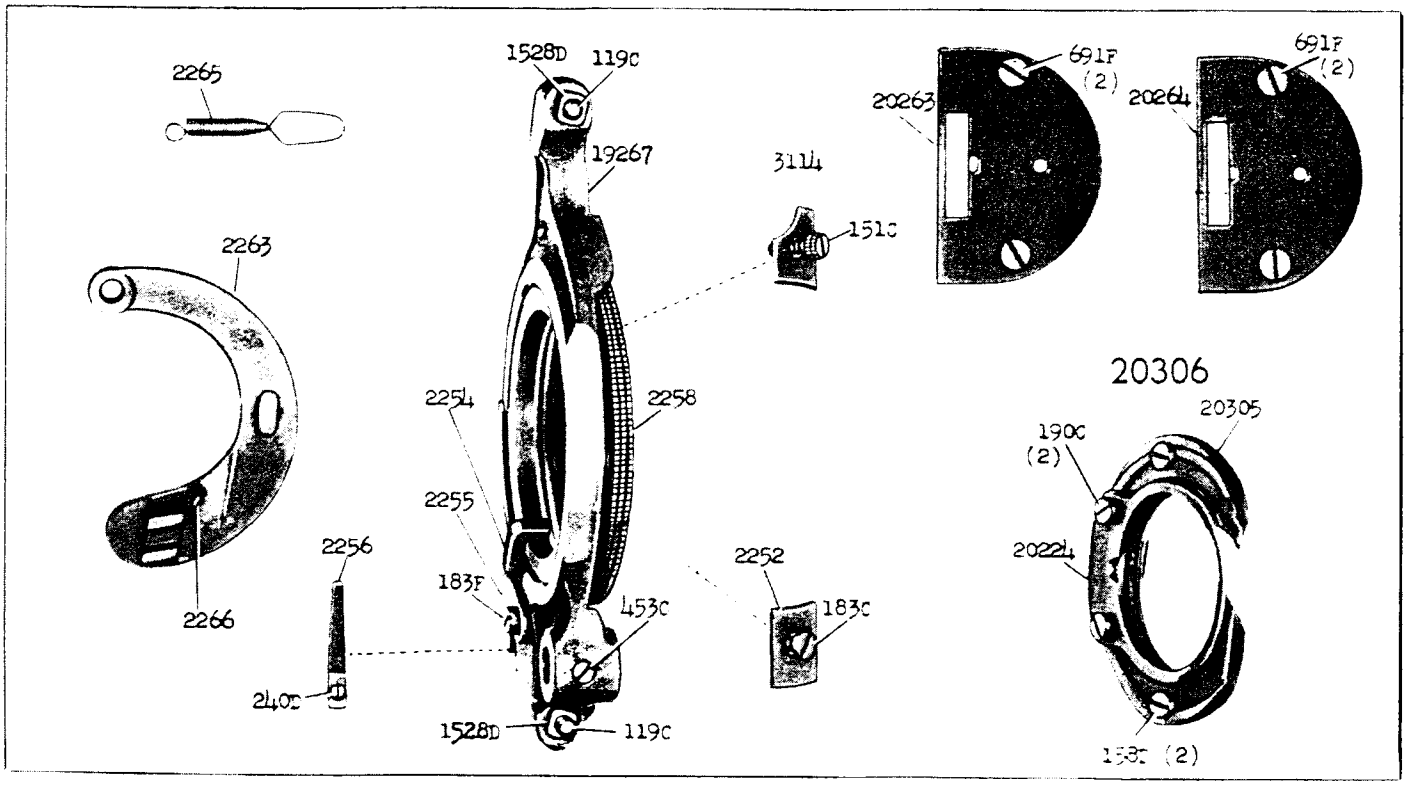

22320 - 1/2

From the library of: Superior Sewing Machine & Supply LLC

22321 - 1/3

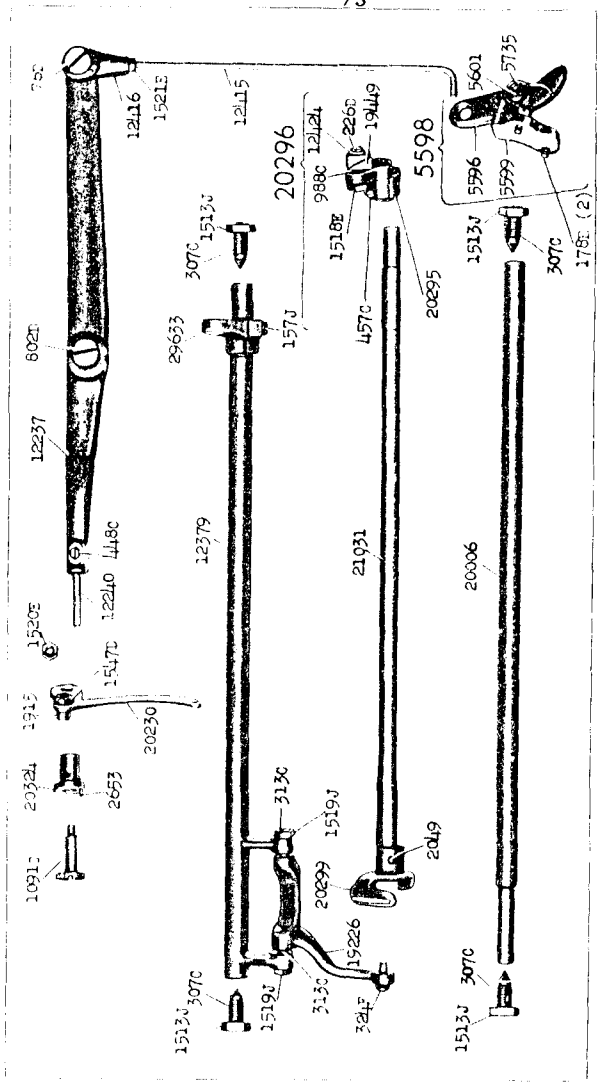

22322 - 1/2

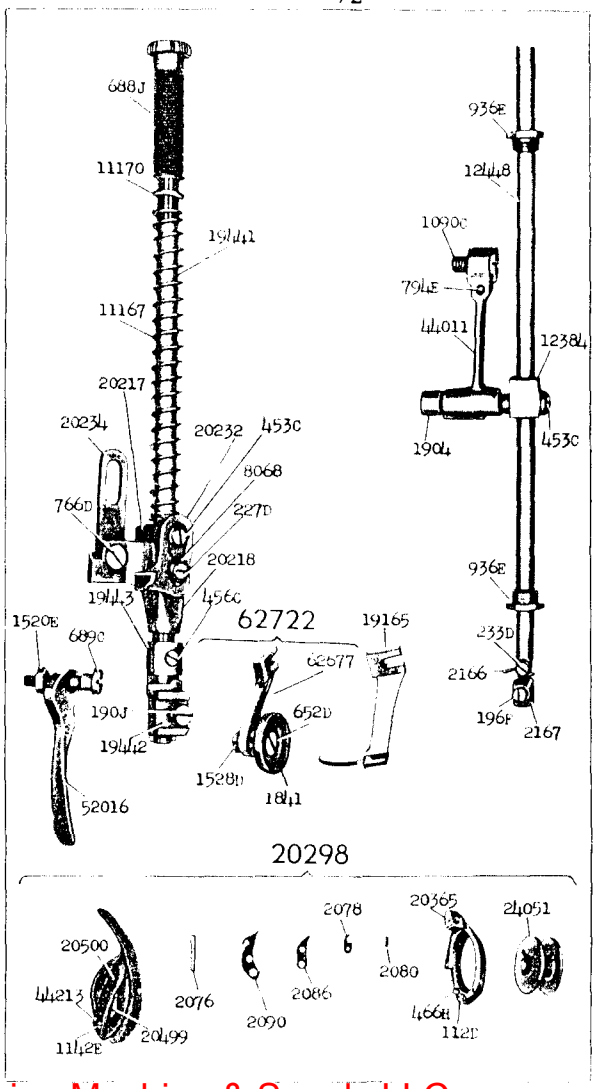

From the library of: Superior Sewing Machine & Supply LLC

22323 - 1/4

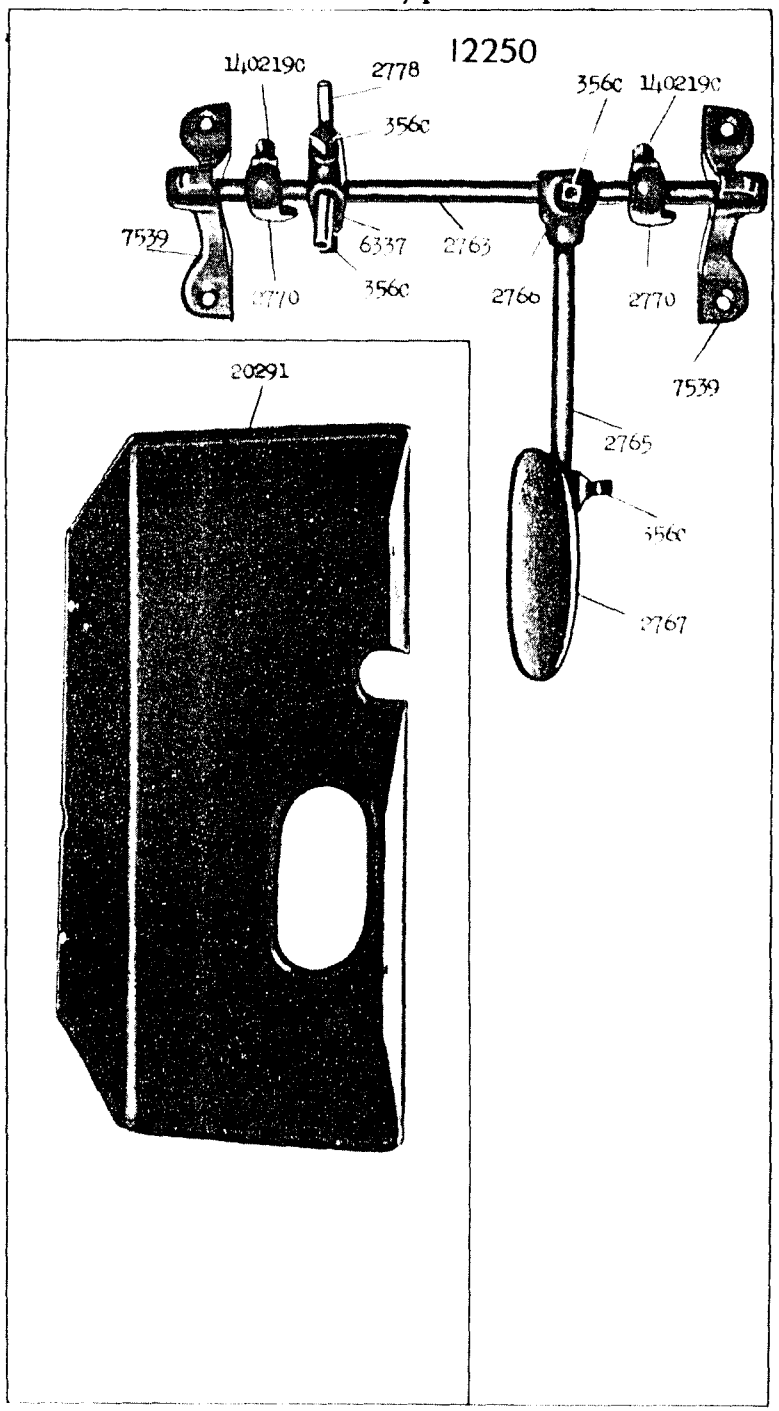

22908 - 2/3

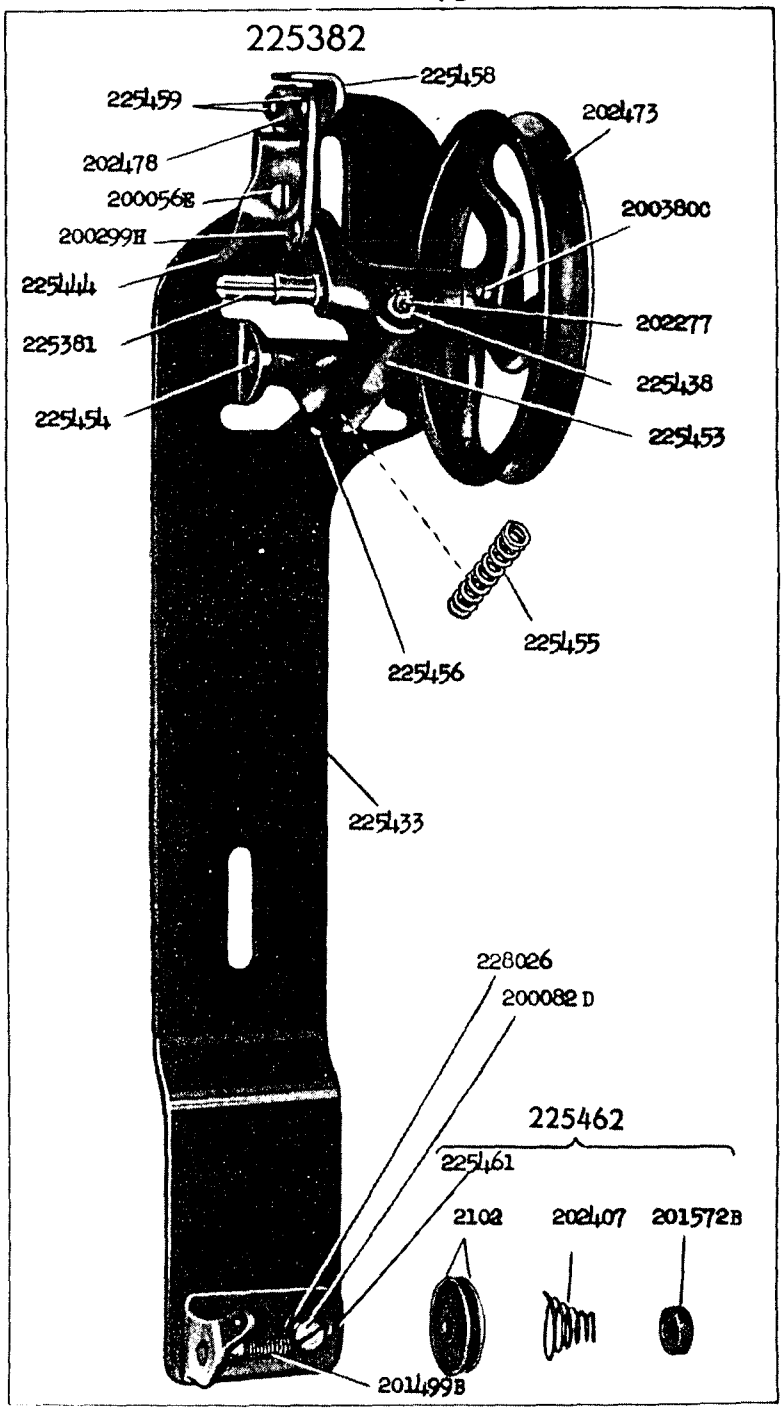

From the library of: Superior Sewing Machine & Supply LLC